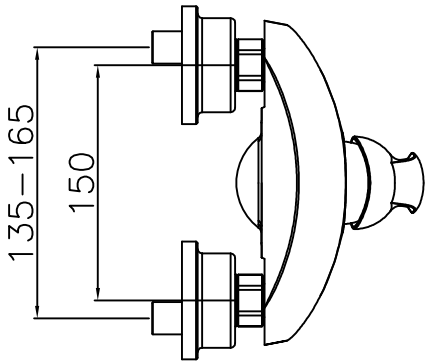

TOP VIEW

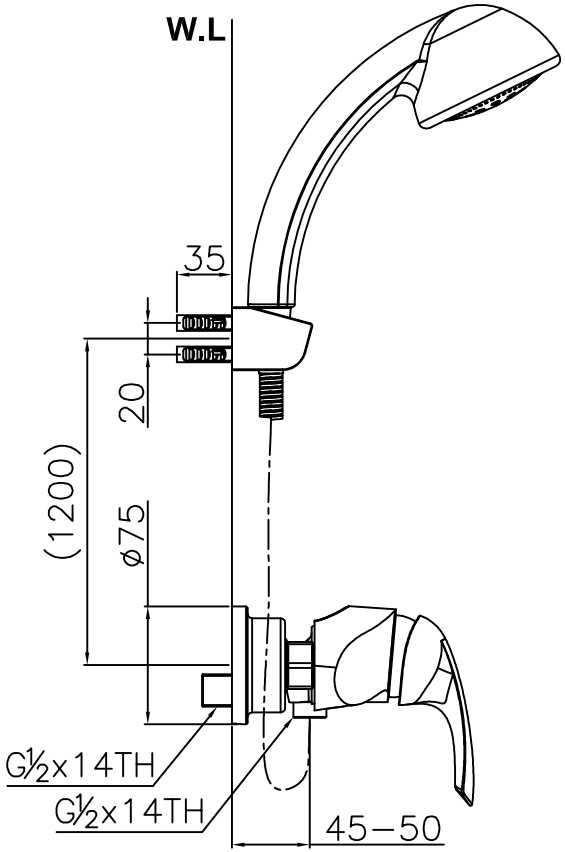

FRONT VIEW

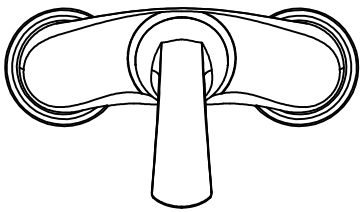

SIDE VIEW

American Standard	TONIC S/L W/M Shower.CR	토닉 벽붙이 샤워용
	KF-2191.55A.6FM0XX	Scale 1 : 1